Product Standards

Product Name	MIP5320MSSCF

Industrial Devices Company
Panasonic Corporation

Established by	Applied by	Checked by	Prepared by

Established	Revised

Type	Silicon MOSFET type Integrated Circuit		
Application	For Switching Power Supply Control		
Structure	CMOS type		
Equivalent Circuit	See Figure 7		
Package	DIP7-A1	Marking	MIP532

A. ABSOLUTE MAXIMUM RATINGS （Ta=25℃±3℃）

No.	Item	Symbol	Ratings	Unit	Note
1	DRAIN Voltage	VD	−0.3 ～ 700	V	※1: It is guaranteed within the pulse as below. Leading Edge Blanking Pulse + Current Limit Delay ton(BLK)＋td(OCL)
2	VIN Voltage	VIN	-0.3 ～ 650	V	
3	VDD current	IDD	25	mA	
4	Feedback Voltage	VFB	−0.3 ～ 8	V	
5	Feedback Current	IFB	Tbf	μA	
6	Output Peak Current	IDP	Tbf(※1)	A	
7	Channel Temperature	Tch	150	℃	
8	Storage Temperature	Tstg	−55 ～ ＋150	℃	
9	Recommended Operating Temperature	Tj	−30 ～ ＋125	℃	

B. ELECTRICAL CHARACTERISTICS Measure condition (TC=25℃±3℃)

No.	Item	Symbol	Measure Condition (Figure 1)	Typ.	Min.	Max.	Unit
【CONTROL FUNCTIONS】＊Design Guarantee Item							
1	Output Frequency	fosc	※Figure 6 VDD=VDD(ON), IFB=−20μA,VD=ILIMIT condition,	100	90	110	kHz
2	Jitter Frequency Deviation	d_fosc	※Figure 6 VDD=VDD(ON), IFB=−20μA,VD=ILIMIT condition,	4.5			kHz
*3	Jitter Frequency Modulation Rate	fM	※Figure 6 VDD=VDD(ON), IFB=−20μA,VD=ILIMIT condition,	250	−	−	Hz
4	Maximum On-state Time	MAX(ON)	VDD=VDD(ON), IFB=−20μA, VD=5V,	12.5			μs
5	VDD start Voltage	VDD(ON)	VD=5V, IFB=−20μA,	5.9			V
6	VDD stop Voltage	VDD(UV)	VD=5V, IFB=−20μA,	4.9			V
7	VDD start/stop Voltage Hysteresis	ΔVDD	VDD(ON) − VDD(UV)	1.0			V
8	VDD clamp Voltage	VDD(CLP)	IDD=3mA	6.3			V
9	Delta VDD clamp	D_VDD(CLP)	VDD(CLP)−VDD(ON)	0.4			V
10	Feedback Current	IFB_STB	ON→OFF VDD=VDD(ON),VD=ILIMITcondition,	Tbf			μA
11	Feedback Current Hysteresis	IFB_STB(HYS)	OFF→ON VDD=VDD(ON),VD=ILIMITcondition,	Tbf			μA
12	FB Pin Voltage	VFB	VDD=VDD(ON), IFB=−20μA, VD=ILIMIT condition,	2			V
13	FB Pin Grounded Current	IFB_GND	VDD=VDD(ON), FB=0 V, VD=ILIMIT condition,	Tbf			μA
14	Pre-start Consuming Current	IDD(SB)	VDD=VDD(ON)−0.3V, IFB=−20μA, VD=5V,	0.25			mA
15	Operating Circuit Consuming Current	IDD	VDD=VDD(ON), IFB=−20μA, VD=ILIMIT condition,	0.4			mA
16	VDD Charging Current	Ich1 Ich2	VDD=0V, VIN=40V, VDD=5V, VIN=40V,	Tbf Tbf			mA mA

No.	Item	Symbol	Measure Condition (Figure 1)	Typ.	Min.	Max.	Unit
【CIRCUIT PROTECTIONS】							
17	Self Protection Current Limit	ILIMIT	※Figure 4 ton=30% duty cycle, VDD=VDD(ON),VFB=3V, VD=adjust,	0.5	0.45	0.55	A
18	When OCP Detected Oscillation Off-state Time	Tdet(OC)	VDD=VDD(ON), VFB=3V, VD=adjusted,	1.0	–	–	μs
*19	Light-load Output Current	ID(OFF)	※Figure 4 ton=30% duty cycle, VDD=VDD(ON),IFB=IFB_STB+5μA, VD=adjust	135	–	–	mA
20	FB Pin Over Load Charging Current	IFBch	VDD=VDD(ON), VFB=3V, VD=ILIMIT condition,	−8			μA
21	FB Pin Over Load Protection Voltage	VFB(OLP)	VDD=VDD(ON), VD=ILIMIT condition,	4.2			V
22	OLP VDD Oscillation Count	OLP_CNT	※Figure 3 VDD=VDD(ON)⇔VDD(UV), VD=ILIMIT condition, FB=Open,	8			–
*23	Leading Edge Blanking Delay	ton(BLK)		350			ns
*24	Current Limit Delay	td(OCL)		150			ns
25	VDD current at latch stop	IDD(OV)	ON→OFF IFB=−20μA, VD=5V,	15			mA
*26	Thermal Shutdown Temperature	TOTP		140	130	150	℃
*27	Thermal Shutdown Temperature Hysteresis	ΔTOTP		70	–	–	℃
28	Power-up Reset Threshold Voltage	VDDreset		2.4	1.5	3.3	V

No.	Item	Symbol	Measure Condition (Figure 1)	Typ.	Min.	Max.	Unit
【High Voltage Input】							
29	Off-state VIN Pin Leakage Current	IIN(LEAK)	VIN=600V, VDD > VDD(ON)	10	–	20	μA
30	VIN Pin Voltage	BVVIN	IIN=100μA, VDD > VDD(ON)	–	650	–	V
31	Minimum VIN Voltage	VIN(MIN)	IFB=−20μA, VD=5V,	–	50	–	V
【Output】							
32	ON-State Resistance	RDS(ON)	VDD=VDD(ON), IFB=−20μA, IDS=100mA,	12	–	–	Ω
33	OFF-State Current	IDSS	VDD=VDD(ON), IFB=−20μA, VD=650V,	15	–	–	μA
34	Breakdown Voltage	VDSS	VDD=VDD(ON), IFB=−20μA, ID=100μA,	–	700	–	V
*35	Rise Time	tr	※Figure 5 VDD=VDD(ON), IFB=−20μA, VD=5V,	50	–	–	ns
*36	Fall Time	tf	※Figure 5 VDD=VDD(ON), IFB=−20μA, VD=5V,	50	–	–	ns

【Figure 1 :　Measure Circuit】

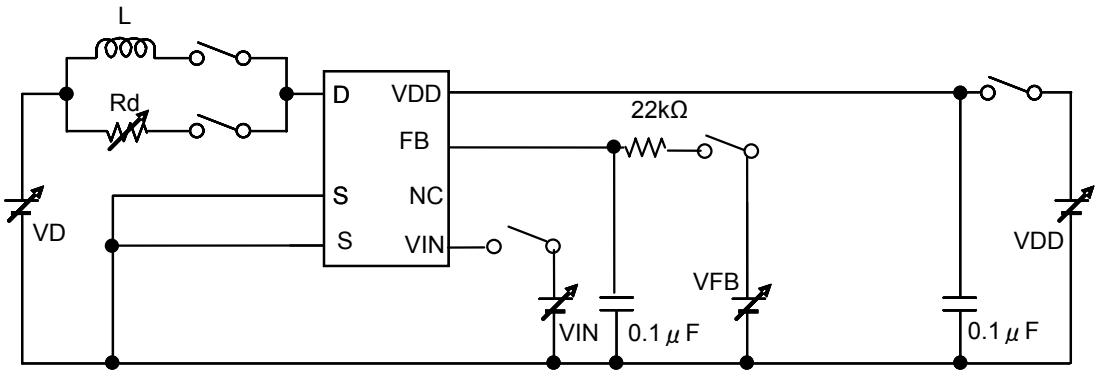

【Figure 2 :　ID vs IFB Measurement】

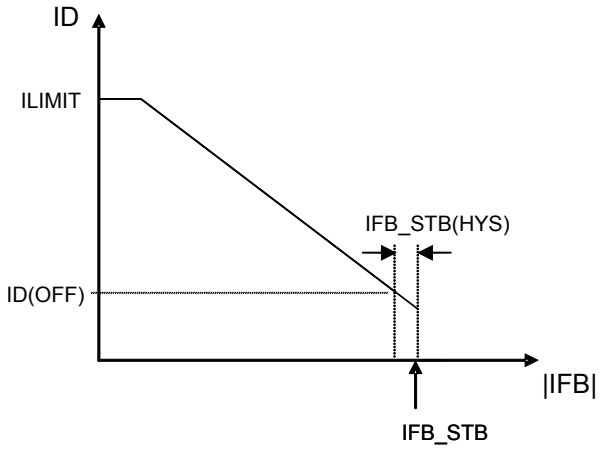

【Figure 3 :　Over-Load Detected Measurement】

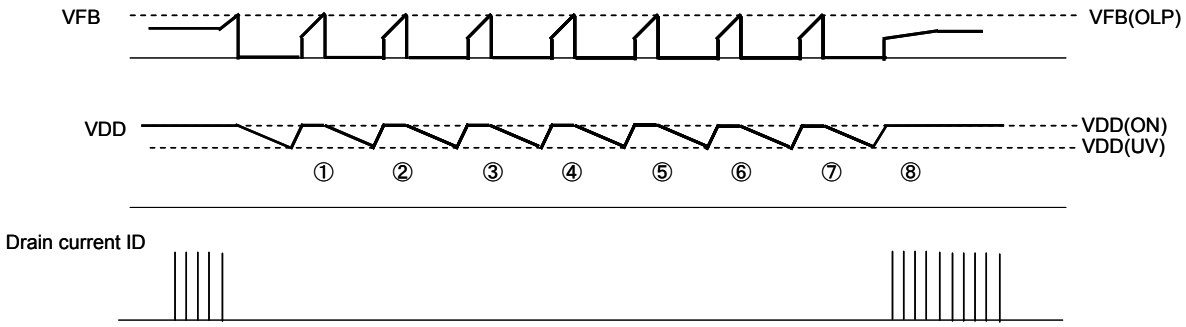

【Figure 4 :　ILIMIT, ID(OFF) Measurement】

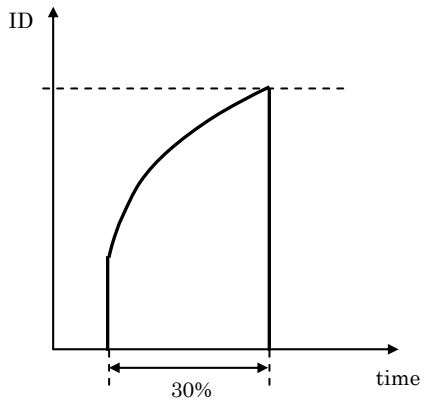

【Figure 5 :　tr, tf Measurement】

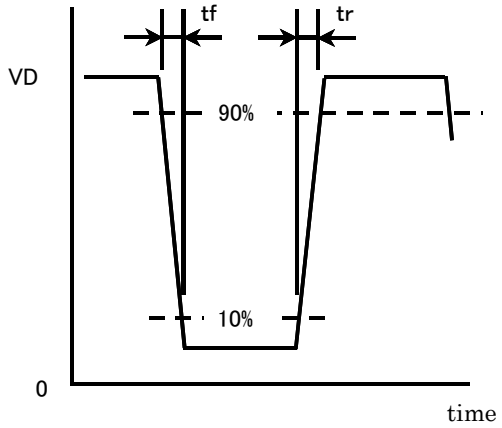

【Figure 6 :　d_fosc, fM Measurement】

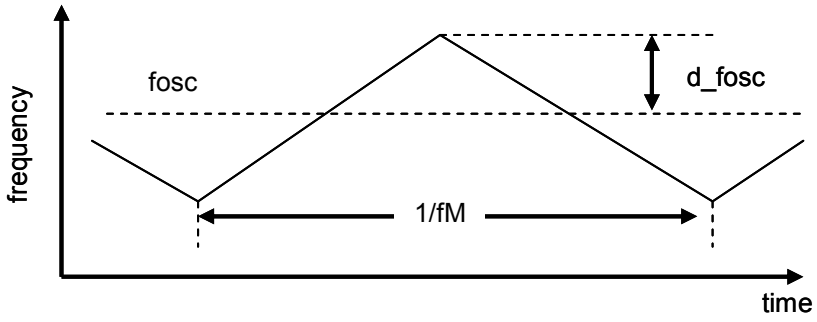

【Figure 7 :　Block Diagram】

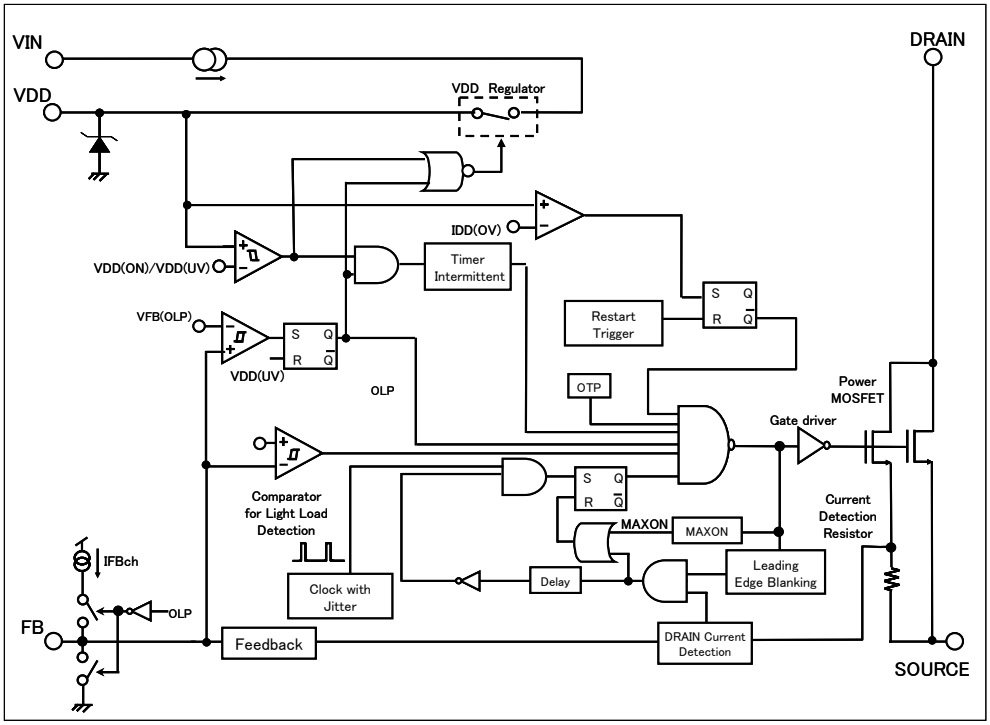

【Figure 8 :　Pin Layout】

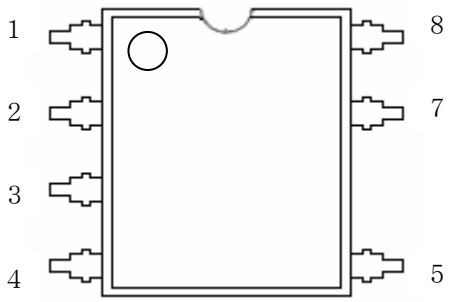

Pin No.	Terminal Name
1	VIN
2	NC
3	FB
4	VDD
5	DRAIN
6	—
7	SOURCE
8	SOURCE

【Precautions for Use 1】

Connect a Ceramic Capacitor (over 0.1 μF) between VDD Pin and SOURCE.

【Precautions for Use 2】

The IPD has risks for break-down or burst or giving off smoke in following conditions. Avoid the following use.
Fuse should be added at the input side or connect zener diode between control pin and GND, etc as a countermeasure to pass regulatory Safety Standard. Concrete countermeasure could be provided individually. However, customer should make the final judgment.

(1) DRAIN Pin and VIN Pin reversely connect into power board.

(2) DRAIN Pin and VIN Pin short circuit.

(3) DRAIN Pin and FB Pin short circuit.

(4) DRAIN Pin and VDD Pin short circuit.

(5) VIN Pin and FB Pin short circuit.

(6) VIN Pin and VDD Pin short circuit.